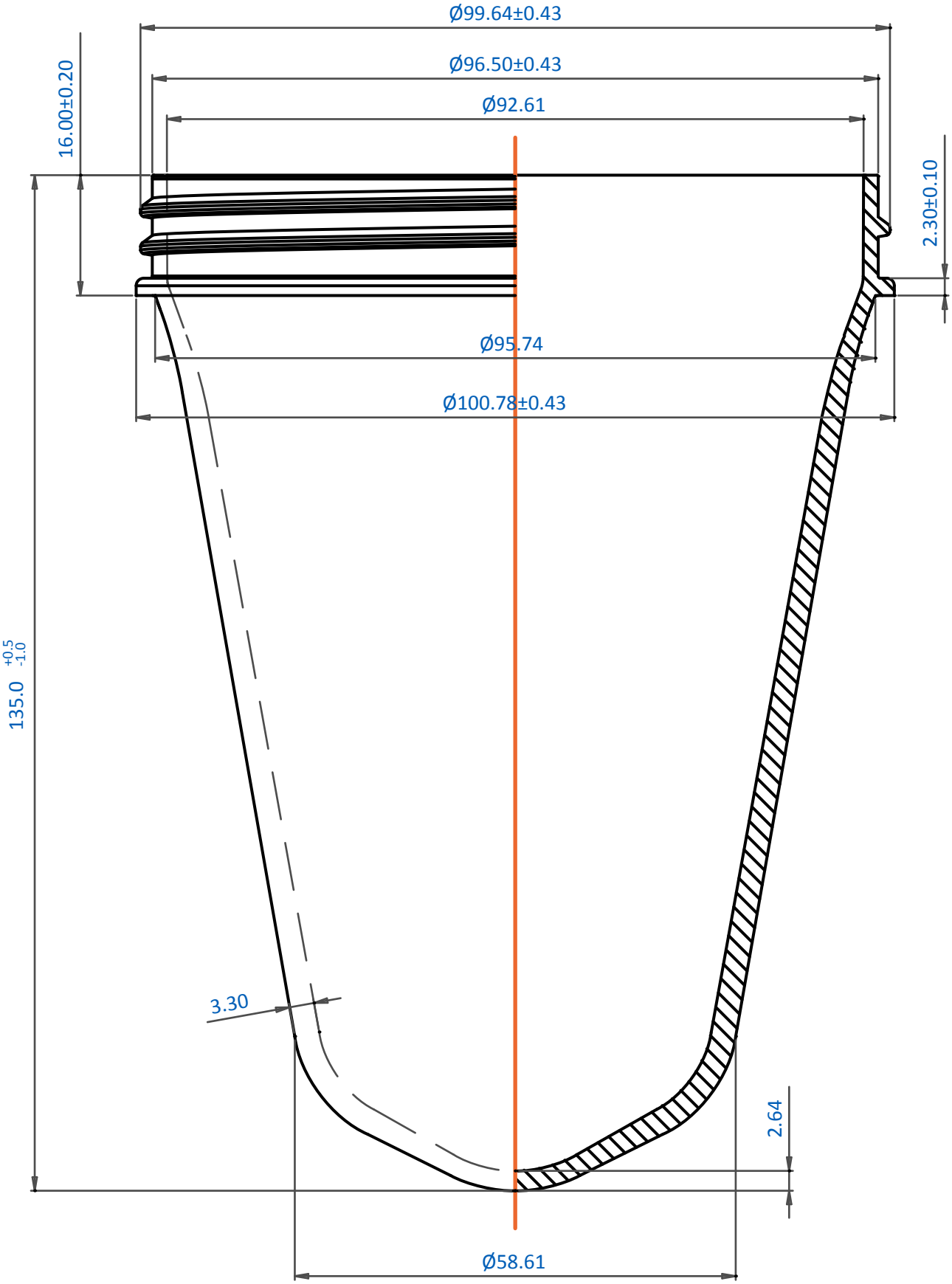Neck Finish	100 mm SP400 (v2)
Preform Weight	120 gm
Neck Weight	16 gm